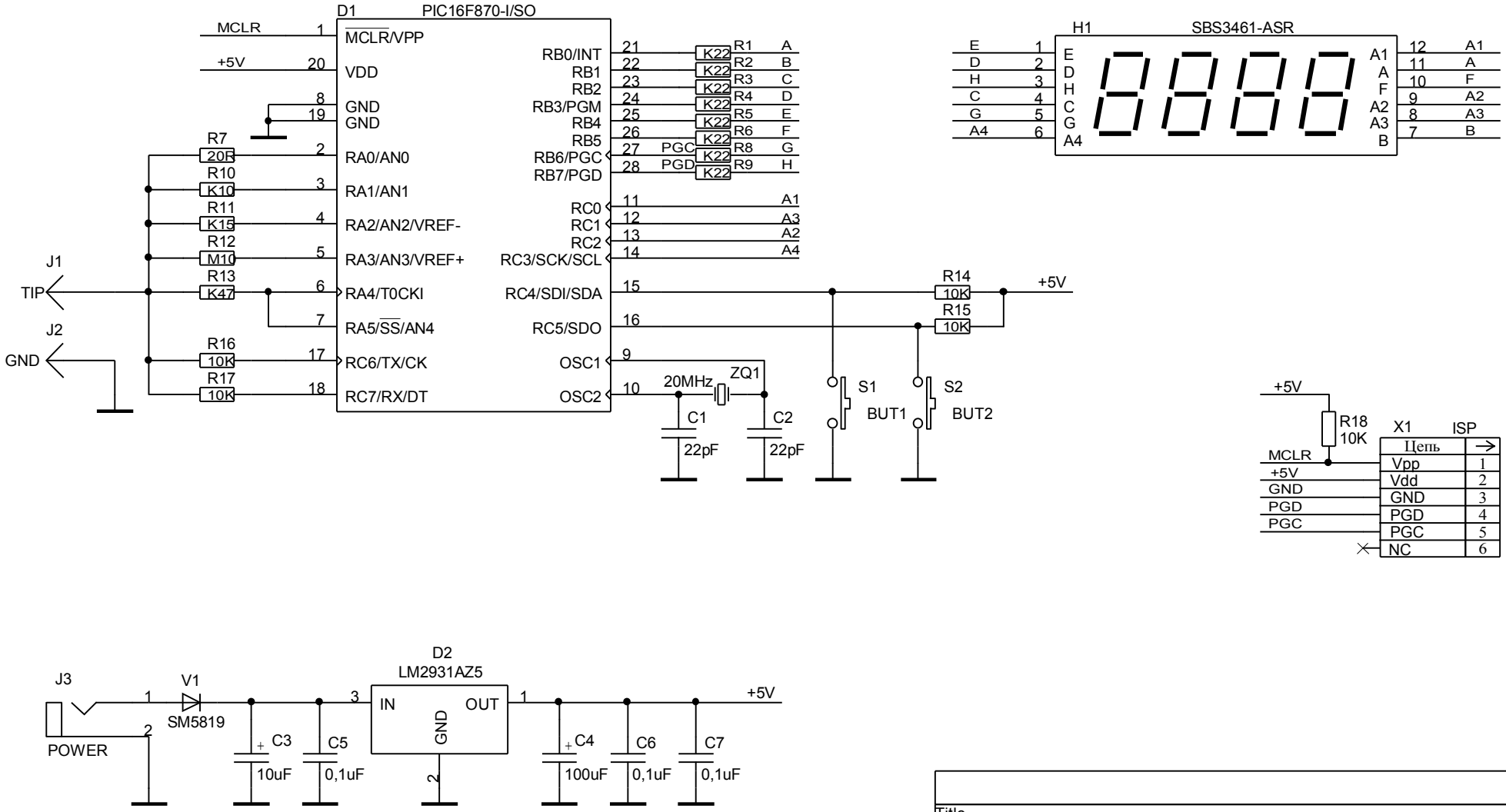

Title	Super Probe		
Size A	Document Number <Doc>		Rev A
Date: Tuesday, June 19, 2007		Sheet 1 of 2	