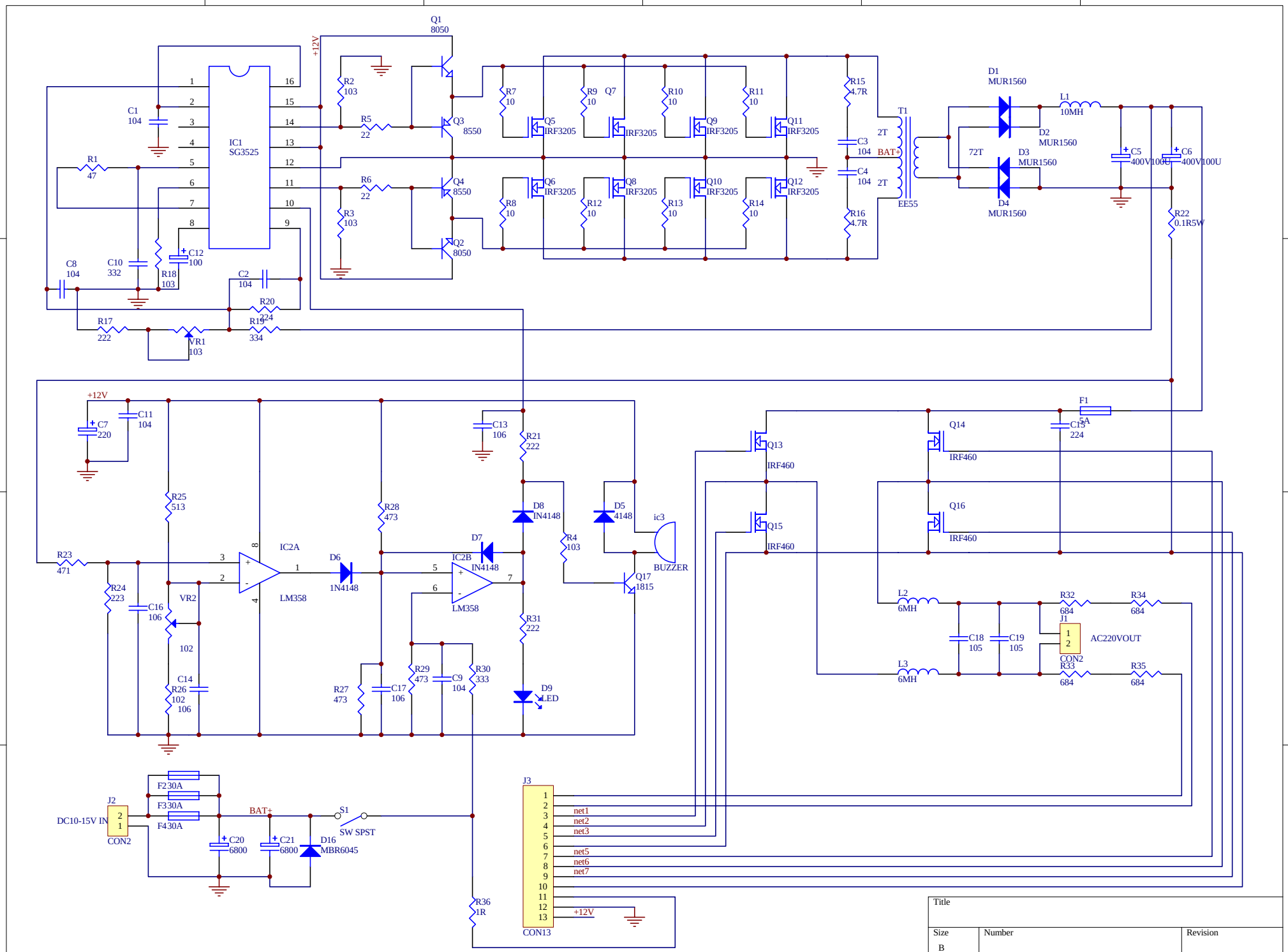

Title		
Size B	Number	Revision
Date: 23-Jul-2007		Sheet of
File: D:\Examples\MyDesignSINEAC.ddb		Drawn By: